DRAWING FOR CUSTOMER

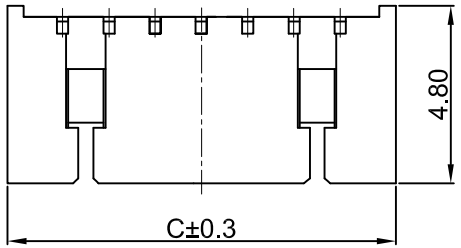

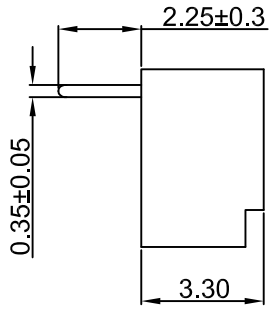

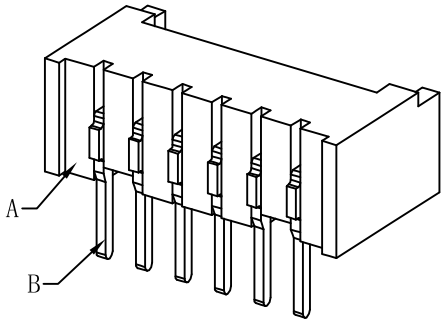

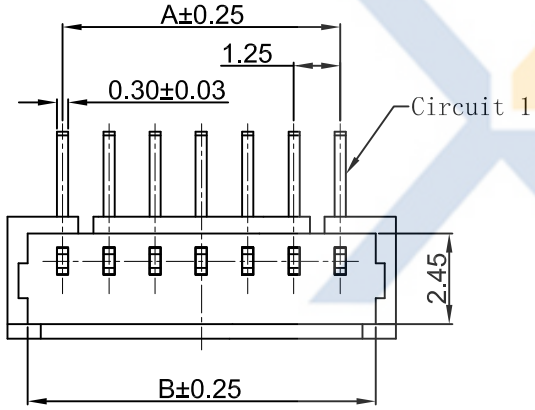

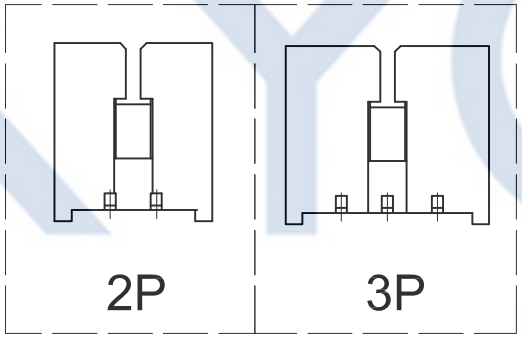

■SPEC.:
- Rated Voltage:125V AC,DC
- Rated Current:1A AC,DC
- Withstand Voltage:500V AC/minute
- Contact Resistance:20mΩ max
- Insulation Resistance:100MΩ min
- Temperature Range:-25℃~+105℃

■Material:
- Insulator(A):PA46/LCP UL94V-0
- Contact Pin(B): Brass
  Finish:Tin-Plated,over Nickel

KB915-XX X D R 6 A

Pin No.

T:TUBE（管装）
R:REEL（卷装）
P:P E （袋装）

D:DIP
S: SMT

R:Right Angle
V:Vertical

Mold No.

Version

Poles	Dimensions(mm)		
	A	B	C
02	1.25	3.20	4.25
03	2.50	4.45	5.50
04	3.75	5.70	6.75
05	5.00	6.95	8.00
06	6.25	8.20	9.25
07	7.50	9.45	10.50
08	8.75	10.70	11.75
09	10.00	11.95	13.00
10	11.25	13.20	14.25
11	12.50	14.45	15.50
12	13.75	15.70	16.75
13	15.00	16.95	18.00
14	16.25	18.20	19.25
15	17.50	19.45	20.50
16	18.75	20.70	21.75

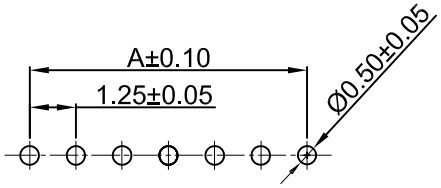

SUGGESTED PCB LAYOUT
(COMPONENT SIDE)

Precision Connectors

DATE 日期	VER 版本	CHANGE HISTORY 變更歷史	CHANGED NAME 修改後料號	DRAWING 變更者
2013-09-20	A		KB915-XXXDR6A	Devin

TOLERANCE 公 差: .X=±0.30, .XX=±0.20, .XXX=±0.10

DRAWING 設計者	Devin	KB915-XXXDR6A	
CHECKED 審查	Thomas	PART NO. 料號	
APPROVED 核准	William	DWG NO. 圖號	PE1904001A

UNIT 單位: mm

XYCO 东莞市轩业电子科技有限公司
TEL: 0769-8297 9981/2/3 http://www.XYCO.com.cn

PRODUCT NAME 產品名稱: 53048 PH1.25mm Wire To Board DIP Right Angle Wafer