DRAWING FOR CUSTOMER

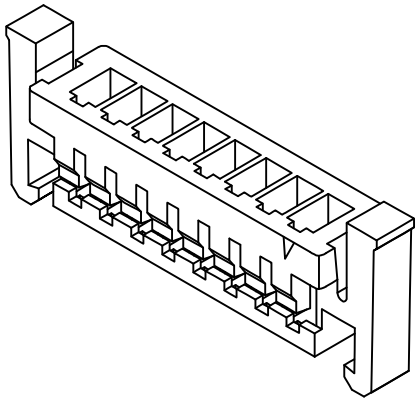

■SPEC.:
- ●Rated Voltage:150V AC,DC
- ●Rated Current:1A AC,DC
- ●Withstand Voltage:500V AC/minute
- ●Contact Resistance:30mΩ max
- ●Insulation Resistance:500MΩ min
- ●Temperature Range:-25℃~+85℃

■Material
- ●Insulator:PA66 UL94V-0
  Color:White

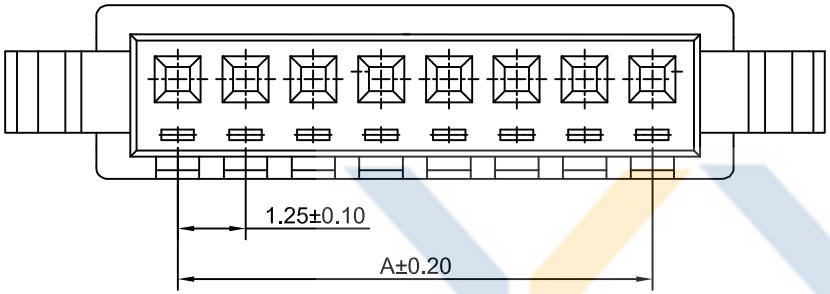

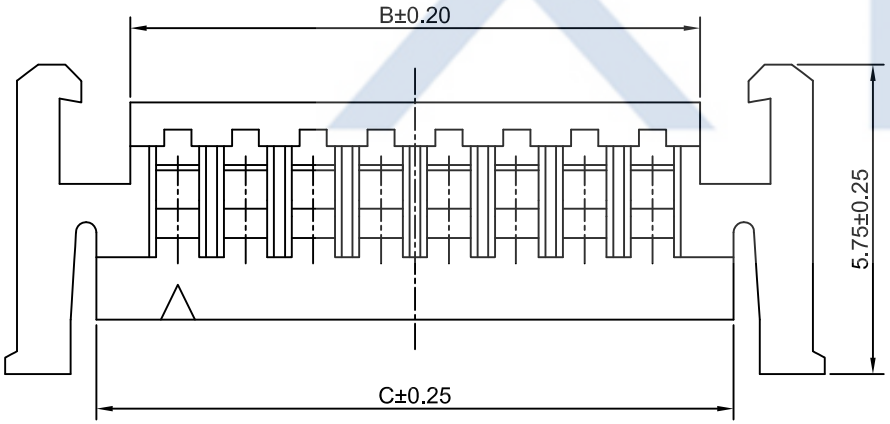

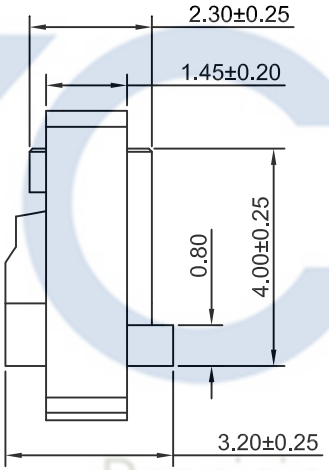

KB911- X X H L 2 A

- Pin No.
- Housing
- Lock
- Version
- Mold No.

Poles	Dimensions(mm)		
	A	B	C
02	1.25	2.90	4.15
03	2.50	4.15	5.40
04	3.75	5.40	6.65
05	5.00	6.65	7.90
06	6.25	7.90	9.15
07	7.50	9.15	10.40
08	8.75	10.40	11.65
09	10.0	11.65	12.90
10	11.25	12.90	14.15
11	12.50	14.15	15.40
12	13.75	15.40	16.65
13	15.00	16.65	17.90
14	16.25	17.90	19.15
15	17.50	19.15	20.40

XYCO Precision Connectors

XYCO 东莞市轩业电子科技有限公司
TEL: 0769-8297 9981/2/3 http://www.XYCO.com.cn

DATE 日期	VER 版本	CHANGE HISTORY 變更歷史	CHANGED NAME 修改後料號	DRAWING 變更者
2015-08-20	A		KB911-XXHL2A	Devin

TOLERANCE 公 差	DRAWING 設計者	Devin	KB911-XXHL2A			
.X=±0.30 .XX=±0.20 .XXX=±0.10	CHECKED 審查	Thomas	PART NO. 料號		UNIT 單位	mm
	APPROVED 核准	William	DWG NO. 圖號	PE2109002A		

PRODUCT NAME 產品名稱	DF13 PH1.25mm Wire To Board Housing With Lock